THIS COPY IS PROVIDED ON A RESTRICTED BASIS AND IS NOT TO BE USED IN ANY WAY DETRIMENTAL TO THE INTERESTS OF PANDUIT CORP.

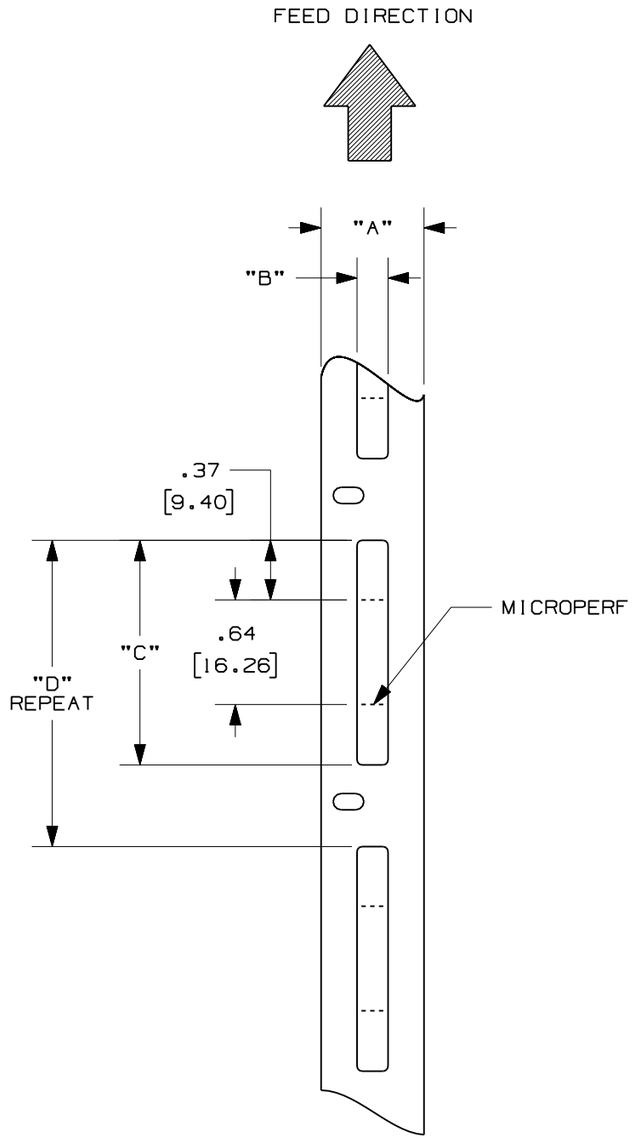

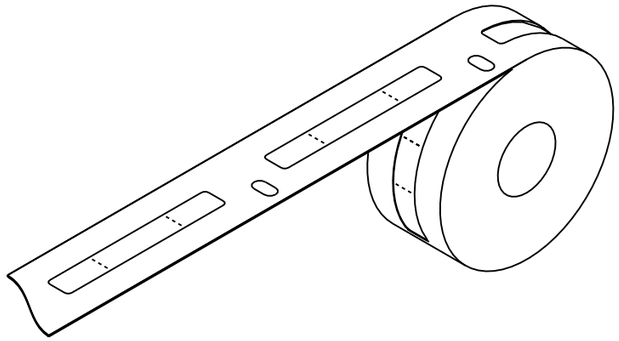

NOTES:
1. SEE MFG. DWG. NO. A61349.
2. DIMENSIONS IN [ ] ARE IN MILLIMETERS.

PANDUIT PART NO.	"A"	"B"	"C"	"D"	LABELS/ROLL
C138X019FJC	0.63 [1.60]	0.190 [4.826]	1.375 [34.93]	1.625 [41.28]	200

REV	DATE	BY	CHK	DESCRIPTION	ECN	-	R	CUST	SUP
0	5-11-06	RVU		RELEASED TO PRODUCTION.	4503		R		

CAD FILENAME/LAYERS 100472MF_C10418_C138X019FJC_00.prt

PANDUIT CORP TINLEY PARK, ILLINOIS

CUSTOMER DRAWING
LS8 COMPONENT LABELS
C138X019FJC

UNLESS OTHERWISE SPECIFIED, DIMENSIONAL TOLERANCES ARE:
(.X) ± (.XXX) ± .015
(.XX) ± .030 ANGLES ±

UNLESS OTHERWISE SPECIFIED, ALL DIMENSIONS ARE GIVEN IN INCHES, THIRD ANGLE PROJECTION

DRAWN BY RVU
DATE 5-11-06
CHK'D
MAT'L: POLYOLEFIN GMPO
SCALE NTS
DRAWING NO. C10418
DWG B
SIZE