NEW WORK INSTALLATION

WALL OPENING: 11" x 5-1/4"

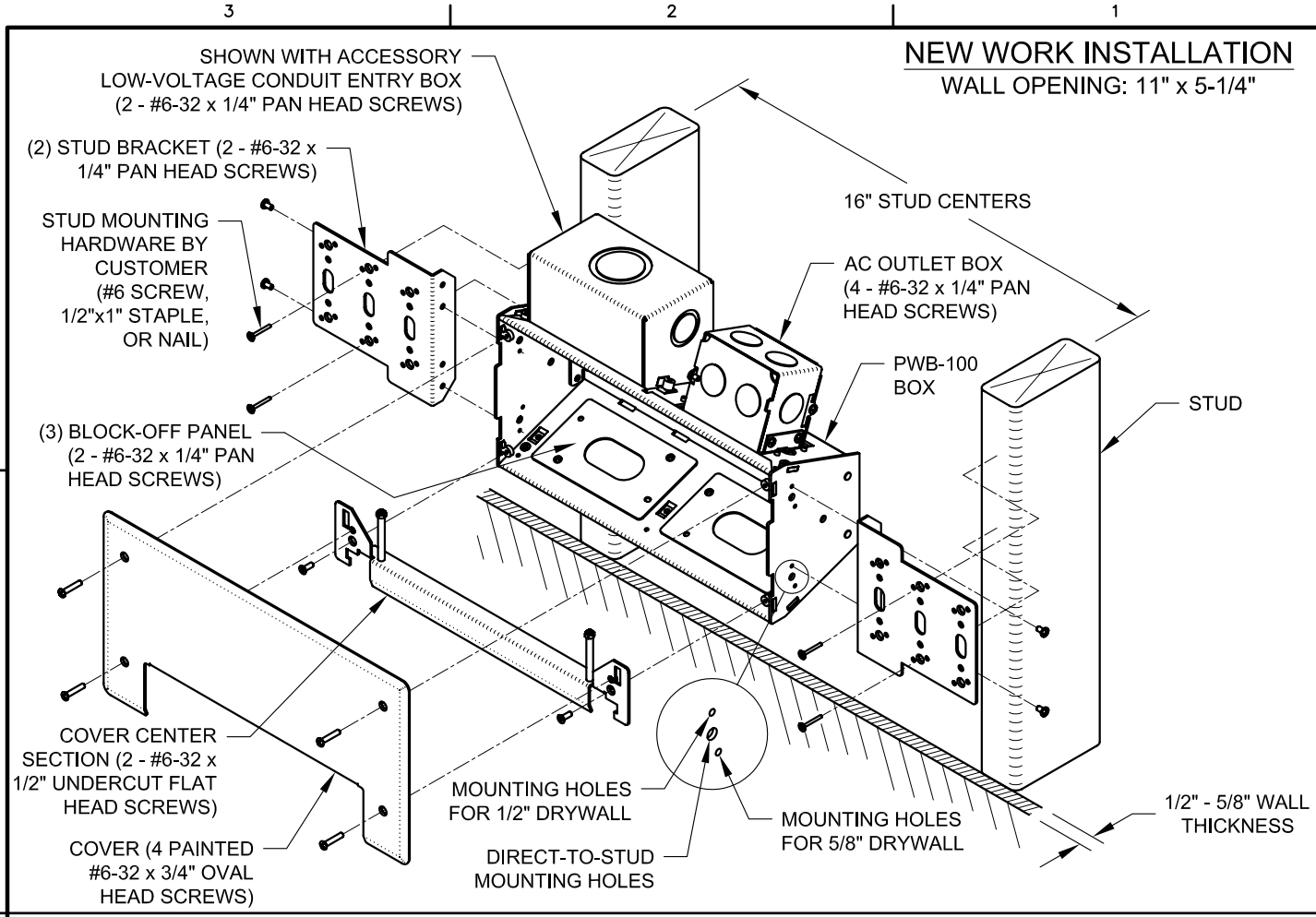

OLD WORK INSTALLATION

WALL OPENING: 11" x 5-1/4"

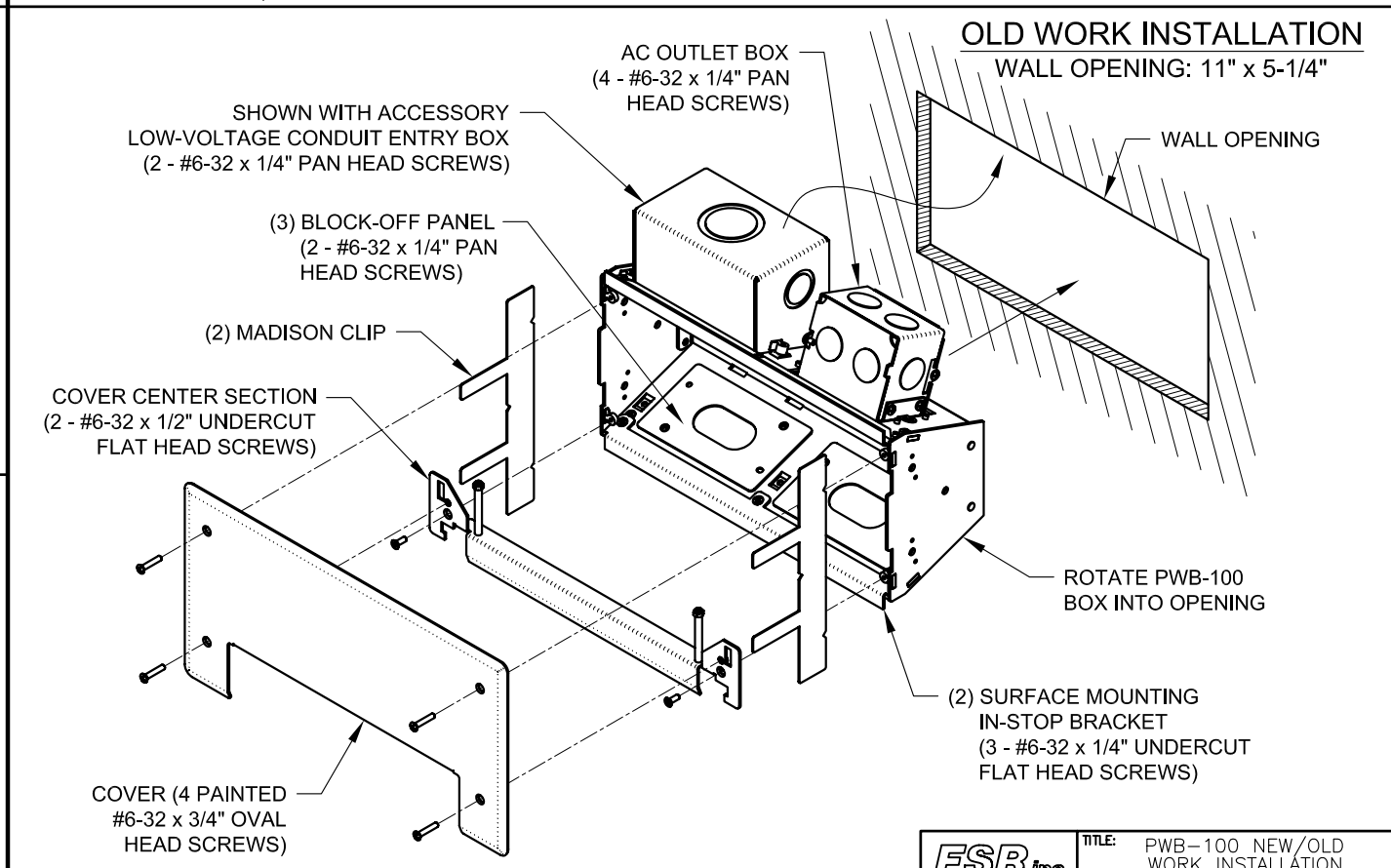

FSR inc.	TITLE: PWB-100 NEW/OLD WORK INSTALLATION FSR P/N: 16518/16519		
	DRAWN BY: JRE	DATE: 03/08/07	REV: 02
	DWG#: A-1768	PAGE: 1 OF 1	SCALE: 1:5