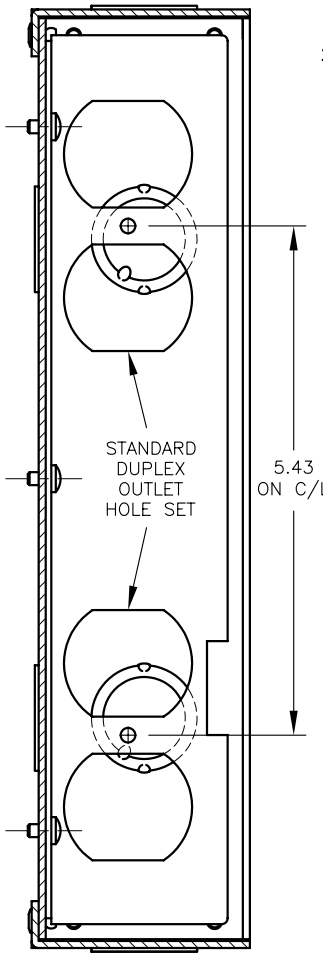

SECTION B–B
VIEW ROTATED 90°
COUNTER–CLOCKWISE

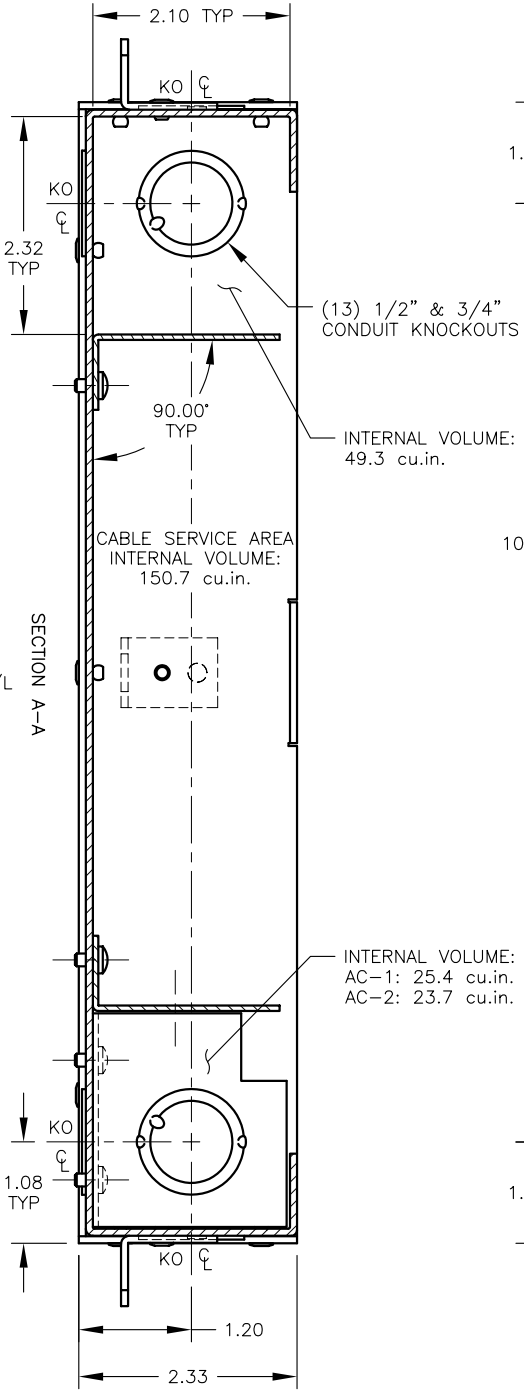

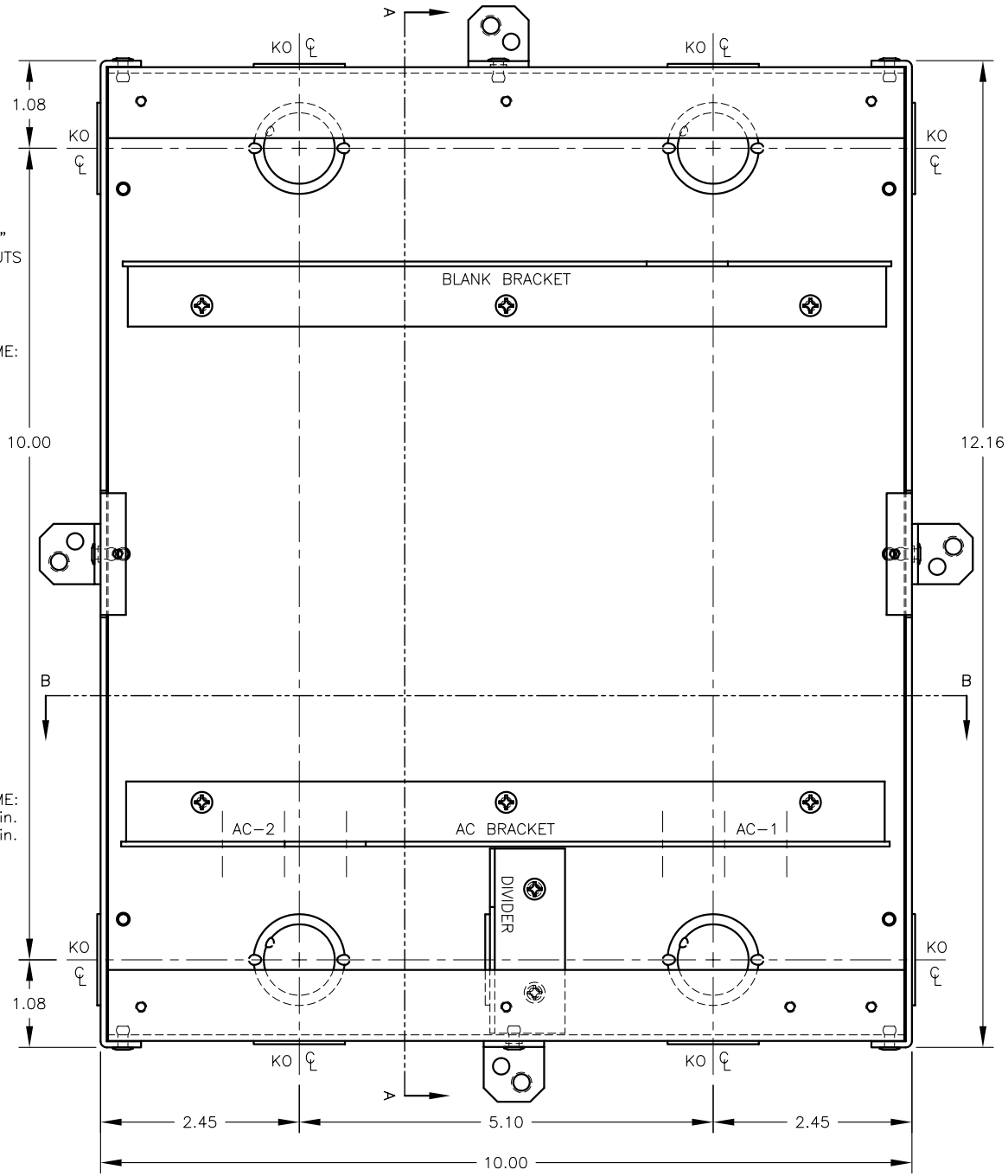

NOTE: KNOCKOUTS (KO's) ARE SYMETRICAL ABOUT THE BOX

FSR inc.
244 BERGEN BLVD.
W. PATERSON, NJ 07424
TEL. (973) 785-4347
FAX (973) 785-3318

TITLE:	2.25" FLOOR BOX FL–500P
DRAWN BY: JRE	DATE: 06/23/05 REV: 01
DWG#: FL–500P–2.25	SCALE: 1:1